TECHMIZE by TONGHUI

OM

OPERATION MANUAL

TH2822 Series

Handheld Digital LCR Meters — TH2822A / TH2822C / TH2822D / TH2822E. Covers set-up, front-panel operation, measurement examples, remote control over Mini-USB with SCPI commands, and performance specifications.

Techmize Electronic GmbH · Ismaning, Germany

Rev. 2026-09

TH2822 Series Operation Manual

Handheld Digital LCR Meters — TH2822A / TH2822C / TH2822D / TH2822E

This manual describes the set-up, operation, remote control and specifications of the Techmize TH2822 series handheld digital LCR meters. The four models share one platform; where a function differs between models, the text is marked with the applicable model names.

Model	Max. test frequency	Test level	DCR	Basic accuracy	Battery
TH2822A	10 kHz	0.6 Vrms	—	0.25%	9 V alkaline
TH2822C	100 kHz	0.6 Vrms	—	0.25%	8.4 V NiMH, rechargeable
TH2822D	10 kHz	0.3 / 0.6 / 1 Vrms	Yes	0.1%	8.4 V NiMH, rechargeable
TH2822E	100 kHz	0.3 / 0.6 / 1 Vrms	Yes	0.1%	8.4 V NiMH, rechargeable

Contents

1 Safety & Compliance 3
1.1 About this manual 3
1.2 Safety symbols used in this manual and on the instrument 3
1.3 General safety requirements 3
1.4 Environmental conditions 4
1.5 Compliance 4
1.6 RoHS 4
1.7 WEEE — disposal of electrical and electronic equipment 4
1.8 Warranty 4
1.9 Limitation of liability 4
1.10 Manufacturer & EU contact 5
2 Getting Started 6
2.1 Unpacking 6
2.2 Power supply 6
2.3 Installing the battery 6
2.4 Connecting the external power adapter 7
2.5 Battery status and charging 8
2.6 Backlight 8
2.7 Switching on, warm-up and first measurement 8
3 Getting to Know the Instrument 9
3.1 Front panel 9
3.2 Keys 9
3.3 Display 10
3.4 Test ports and fixtures 11
4 Operation 13
4.1 Measurement parameters 13
4.2 Test frequency 13
4.3 Test level TH2822D/E 14
4.4 Measurement speed 14
4.5 Series and parallel equivalent circuit 14
4.6 Auto LCR 14
4.7 Data hold (HOLD) 15
4.8 Record mode (REC) 15
4.9 Tolerance mode (TOL) 15
4.10 Open / short zeroing (CLEAR) 16
4.11 Utility menu (UTIL) 17
4.12 Fuse protection 18
5 Measurement Examples 19
5.1 Inductance 19
5.2 Capacitance 19
5.3 Resistance 20
5.4 Impedance 20
5.5 DC resistance TH2822D/E 20
6 Remote Control 21
6.1 Connecting to a PC 21
6.2 The RMT key and operating states 21
6.3 Command protocol 21
6.4 Command reference 22
7 Specifications 26
7.1 General specifications 26
7.2 Power supply and environment 27
7.3 Accuracy conditions 27
7.4 Inductance L and quality factor Q 28
7.5 Capacitance C and dissipation factor D 29
7.6 Impedance Z, phase angle θ and DC resistance DCR 30
7.7 Equivalent series and parallel resistance 30
8 Maintenance & Support 32
8.1 Troubleshooting 32
8.2 Cleaning 32
8.3 Service and support 32
A Quick Reference 33
A.1 Common tasks 33
A.2 Terms 33

CHAPTER 1

Safety & Compliance

1.1 About this manual

This manual is the original-language (English) edition of the operation manual for the Techmize TH2822 series of handheld digital LCR meters, covering the models **TH2822A**, **TH2822C**, **TH2822D** and **TH2822E**. It is provided in electronic (PDF) form. Where a function, key label or specification differs between models, the text carries a model tag such as TH2822D/E.

Techmize continually improves its instruments; content, specifications and accessories described here are subject to change without notice. Where this manual and the instrument appear to disagree, or where a described function is not present on your model, contact Techmize or your authorized distributor (§1.10) before relying on the instrument for measurement decisions.

1.2 Safety symbols used in this manual and on the instrument

WARNING — a hazard that, if not avoided, could result in personal injury or damage to the instrument. Also printed on the instrument as a reminder to follow the operating instructions in this manual.

CAUTION — a condition that, if not avoided, could damage the instrument or the device under test, or invalidate a measurement.

NOTE — supplementary information that helps with correct or efficient use.

Direct current (DC) — marks the DC power input.

Power-input polarity — centre pin positive (+), outer sleeve negative (–).

1.3 General safety requirements

These precautions apply to operating and maintenance personnel and must be observed during operation, service and repair.

- Do **not** use the instrument in a flammable or explosive atmosphere. Avoid dusty locations, direct sunlight, high humidity and strong electromagnetic radiation.
- The instrument is intended for **indoor use at altitudes up to 2000 m**. For short-term outdoor use, protect it from direct sunlight, water and moisture, electromagnetic radiation, dust and explosive atmospheres.
- Only qualified service personnel may open the rear cover, replace components or adjust the instrument. Contact your distributor or Techmize after-sales service (§1.10).
- Do not disassemble or modify the instrument. Partial substitutions and unauthorized modifications may make it impossible to restore the original performance.
- Use the instrument only as described in this manual. Read all warnings and safety information before use.
- The instrument is powered either from its battery or from a 12 V DC / 150 mA power adapter. The adapter input supply must match the rating on its label and comply with the relevant IEC standards.

WARNING — CHARGED COMPONENTS

Never measure a charged capacitor: discharge capacitors and other charged components before every measurement, otherwise the instrument can be damaged. When measuring components in a circuit, make sure the circuit is switched off and all capacitors in it are discharged. Never measure a live circuit.

WARNING — BATTERY CHARGING TH2822C/D/E

These models contain a charging circuit. Never fit a non-rechargeable battery and connect the external adapter: charging a non-rechargeable battery may cause it to burst. Do not connect the adapter if the battery is fitted with the wrong polarity, as this can seriously damage the instrument.

1.4 Environmental conditions

Condition	Value
Operating temperature	0 °C to 40 °C
Operating relative humidity	≤ 90% R.H.
Storage temperature	−20 °C to +50 °C
Storage relative humidity	0 – 80% R.H.
Pollution degree	2
Altitude / location	Up to 2000 m, indoor use

1.5 Compliance

The instrument carries the **CE** mark, backed by an EU Declaration of Conformity held by Techmize, certifying conformity with the current applicable EU directives. It is designed and tested in accordance with **IEC 61010-1:2001** (safety requirements for electrical equipment for measurement, control and laboratory use) and **IEC 61326-2-1:2005** (EMC requirements). A copy of the Declaration of Conformity is available from Techmize on request (§1.10).

1.6 RoHS

Techmize declares this instrument compliant with Directive 2011/65/EU (RoHS), as amended, restricting the use of certain hazardous substances in electrical and electronic equipment. This is a supplier declaration of conformity; no independent RoHS certificate is held for this product.

1.7 WEEE — disposal of electrical and electronic equipment



This symbol indicates that the instrument, including its battery, must not be disposed of as unsorted municipal waste at the end of its service life. Within the European Union, return it to Techmize, your distributor, or a designated collection point for electrical and electronic equipment, in accordance with the WEEE Directive (2012/19/EU) and its national transposition in your country.

1.8 Warranty

The complete instrument and its accessories are covered by a warranty of **two (2) years** from the date of delivery. The warranty covers product defects and failure of parts under normal use. To claim warranty service, return the instrument with the purchase document or invoice and the accessories supplied with it.

The warranty does not cover damage caused by misuse or abuse, or by unauthorized disassembly or repair. The serial number on the rear of the instrument corresponds to the firmware; if it is missing, damaged or altered, the warranty does not apply.

1.9 Limitation of liability

Except as expressly stated in §1.8, Techmize makes no other warranty, express or implied, regarding this instrument or its documentation. Techmize is not liable for indirect, incidental or consequential damages arising from the use of this instrument, to the extent permitted by applicable law.

1.10 Manufacturer & EU contact

Techmize Electronic GmbH

Office 125–126, Regus
Carl-Zeiss-Ring 15a, 85737 Ismaning,
Germany
An international subsidiary of Changzhou
Tonghui Electronic Co., Ltd. (China)

Contact

Mobile: +49 171 4981898
Email: dx.han@tonghui.com.cn
Web: en.tonghui.com.cn

Registration

Managing Director: Haohua Zhao
Register Court: Amtsgericht München
HRB 312530 · VAT ID DE463170824

CHAPTER 2

Getting Started

2.1 Unpacking

Check the contents against the list below. If anything is missing or damaged, contact Techmize or your distributor immediately.

Item	Description	Models
—	TH2822 series handheld LCR meter	A / C / D / E
—	9 V alkaline battery (A) / 8.4 V NiMH rechargeable battery (C, D, E)	A / C / D / E
TH26028(GS)	EU-style AC power adapter	A / C / D / E
—	Mini-USB interface cable	A / C / D / E
TH26004F	Test leads, red/black banana plug to alligator clip	A / C / D / E
TH26027AS	Four-terminal Kelvin test clip	A / C / D / E
TH26010B	Short-circuit calibration piece	A / C / D / E
TH26029C	SMD Kelvin test tweezers	C / D / E only
TH26009C OPTIONAL	SMD Kelvin test tweezers	A / C / D / E

2.2 Power supply

The instrument can be powered from its internal battery or from the external power adapter. When the adapter is connected, the instrument gives priority to external power and switches between the two sources automatically, without interruption.

Model	Battery	Charging
TH2822A	9 V alkaline, IEC 6LR61 (non-rechargeable)	No charging circuit
TH2822C / D / E	8.4 V NiMH, 200 mAh, rechargeable, type LH-200H7C	Automatic, from the external adapter

TH2822C, TH2822D and TH2822E use the same battery type and the same automatic charging circuit; the charge time and charge current differ between TH2822C and TH2822D/E — see §2.5 and §7.2.

2.3 Installing the battery

Battery power makes the instrument portable and ready to measure anywhere.

1. Fold out the kickstand on the rear of the instrument. Loosen the screw that secures the battery cover with a screwdriver and remove the cover (Figure 2-1).
2. Insert a suitable battery into the compartment, observing the polarity markings printed in the compartment (Figure 2-2). Make sure the polarity of the battery matches the markings before pressing it in.
3. Slide the cover back into its groove and tighten the screw.
4. Hold the POWER key for about 2 seconds to switch the instrument on.



Figure 2-1 — Rear cover and screw



Figure 2-2 — Battery compartment, polarity markings (+ / −)

CAUTION TH2822C/D/E

Fit only the specified rechargeable battery (LH-200H7C, 8.4 V NiMH). Avoid fitting a non-rechargeable battery: the charging circuit starts as soon as the adapter is connected.

NOTE

To replace the battery, switch the instrument off and disconnect the adapter first.

2.4 Connecting the external power adapter

WARNING

Use the adapter supplied with the instrument, or an adapter specified by Techmize. Other adapters may damage the instrument. Before use, confirm that your mains supply matches the rating on the adapter label.

1. Check that the battery is fitted correctly.
2. Check that the mains supply matches the adapter rating.
3. Plug the adapter's DC plug into the 12 V DC socket on the **right-hand side** of the instrument (Figure 2-3).
4. Connect the adapter to the mains socket.
5. Hold the POWER key for about 2 seconds to switch the instrument on.

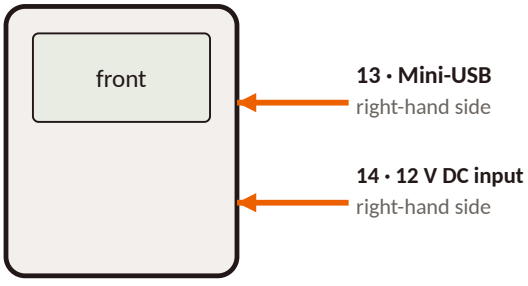

Figure 2-3 — Position of the Mini-USB and 12 V DC sockets, both on the right-hand side (viewed from the front)

The adapter is rated **12 V DC, 150 mA**, with a 4 mm plug, centre pin positive. When external power is connected and healthy, the instrument switches from battery to external power immediately and without interruption.

2.5 Battery status and charging

On battery power, the low-battery indicator ▭+− appears on the LCD when the battery voltage falls below **6.8 V**. The battery voltage can be read in the utility menu (§4.11, item `bAtt`).

TH2822A

There is no charging circuit and no charge indicator. When the low-battery indicator appears, replace the 9 V alkaline battery. When the adapter is connected, the battery circuit is disconnected and the instrument runs from external power.

TH2822C / D / E

When the low-battery indicator appears, charge the battery at once to continue operation. Connecting the adapter starts charging automatically, whether the instrument is switched on or off; no operator action is needed. While charging, the battery indicator on the LCD is lit. TH2822D/E The charge indicator lamp inside the RMT ☼ key is also lit while charging; TH2822C has no lamp in this key.

Charge cycle: on TH2822C a single continuous charge cycle lasts a maximum of 80 minutes at a charge current of up to 42 mA; on TH2822D/E a single continuous charge cycle lasts a maximum of 160 minutes at a charge current of up to 100 mA. If the battery is already full, charging stops automatically; if it is not full after one cycle, another cycle starts. A new cycle begins as soon as external power is connected.

> **NOTE**
> Without external power, the battery indicator means “battery low”. With external power connected, it means “charging”.

2.6 Backlight

In poor ambient light, switch on the backlight to help reading: **hold the RMT ☼ key for about 2 seconds**; hold it again for about 2 seconds to switch the backlight off.

- **On battery power**, to save energy the backlight dims after about 15 seconds and switches off automatically after about 30 seconds.
- **On external power**, the backlight stays at full brightness until you switch it off. If you remove external power, the dimming and automatic switch-off apply again.

2.7 Switching on, warm-up and first measurement

1. Hold POWER for about 2 seconds.
2. Allow about **10 minutes** of warm-up before measurements that need the specified accuracy.
3. Perform open and short zeroing at the frequency you will use (§4.10). Zeroing data are held in RAM and are lost when the instrument is switched off, so zero the instrument after every power-up.
4. Connect the device under test and read the result (Chapter 5).

CHAPTER 3

Getting to Know the Instrument

3.1 Front panel



Figure 3-1 — Front panel (TH2822E shown). Items 13 and 14 are on the right-hand side.

1 **LCD** — dual display of primary and secondary parameters

2 **RMT** ☼ — remote-control / Auto Fetch mode; long press: backlight; charge indicator lamp (D/E)

3 **POWER** — power key

4 **FREQ / REC** — test frequency / record mode

5 **SEC / LEV** — secondary parameter (D, Q, θ, ESR) / test level (D/E)

6 **PRI / AUTO** — primary parameter (L, C, R, Z, DCR) / Auto LCR

7 **RATE / P ↔ S** — measurement speed / equivalent circuit

8 **HOLD / UTIL** — data hold / utility menu

9 **TOL / ▲** — tolerance mode / menu up key

10 **CLEAR / ▼** — open/short zeroing / menu down key

11 **Five-terminal test slot** — leaded components inserted directly, or test fixtures

12 **Three-terminal banana jacks** — for banana-plug to alligator-clip test leads

13 **Mini-USB socket** — right-hand side, for remote control

14 **12 V DC input socket** — right-hand side, for the AC adapter

> **NOTE**
>
> The figure shows the TH2822E. On TH2822A and TH2822C the two parameter keys are labelled **L/C/R/Z** (key 6, primary parameter and Auto LCR) and **D/Q/θ/ESR** (key 5, secondary parameter); these models have no LEV function and no DCR. In this manual the keys are called PRI and SEC on all models.

3.2 Keys

Except for the power key, the front-panel functions are colour-coded:

- **Black** — first function, responds to a **short press**.
- **Orange** — second function, responds to a **long press of about 2 seconds**.
- **Blue** — utility functions, available after a long press of [UTIL] (§4.11).

In this manual a key is always referred to by its name; “press” means a short press and “hold” means a long press.

Key	Short press	Long press (≈ 2 s)
POWER	Switches the instrument on and off (hold for about 2 seconds).	
RMT ☼	Remote / Auto Fetch state switching (Chapter 6)	Backlight on / off
HOLD / UTIL	Data hold on / off	Enter utility menu
SEC / LEV	Select secondary parameter: D, Q, θ, ESR	Select test level 0.6 V → 0.3 V → 1 V **TH2822D/E**
FREQ / REC	Select test frequency	Enter / exit record mode
TOL / ▲	Enter tolerance mode; select limit 1 / 5 / 10 / 20%	Exit tolerance mode
PRI / AUTO	Select primary parameter	Auto LCR on / off
RATE / P ↔ S	Fast / slow measurement speed	Parallel / series equivalent circuit
CLEAR / ▼	Open / short zeroing	—

3.3 Display



Figure 3-2 — LCD with all segments lit

No.	Indicator	Meaning
1	L · C · R · Z · DCR	Primary parameter (DCR: TH2822D/E)
2	MAX · AVG · MIN	Maximum, average, minimum value in record mode
3	AUTO	Auto LCR active
4	θ · D · Q · ESR	Secondary parameter: phase angle, dissipation factor, quality factor, equivalent series resistance
5	FAST · SLOW	Fast / slow measurement speed
6	TOL · 1 · 5 · 10 · 20 % · DH	Tolerance mode and selected limit; DH: data hold active
7	Test level indicators	Test level 0.3 V / 0.6 V / 1 V (TH2822D/E)
8	Secondary display	Secondary parameter, frequency, tolerance deviation, or menu / message text
9	Beeper icon	Beeper enabled
10	deg · Ω · % · kHz	Units of the secondary display: θ in degrees, ESR in ohms, tolerance deviation in percent, frequency in kHz
11	@OFF	Auto power-off timer running
12	Battery icon	Low battery (on battery power) / charging (with external power)
13	Primary display	Primary parameter value; menu item names in the utility menu
14	PAL · SER	Parallel / series equivalent circuit
15	m µ H · p n µ F · M k Ω	Units of the primary display: inductance, capacitance, resistance / impedance / DC resistance
16	RMT	Remote-control state

Messages shown on the display

Message	Meaning
`SHrt`	Pressing CLEAR now performs short zeroing
`OPEn`	Pressing CLEAR now performs open zeroing
`CAL`	User calibration (open/short zeroing) in progress
`FUSE`	Internal fuse blown or damaged (§4.12)
`Err`	Error indication
`E01`	A/D conversion error (UNK)
`E02`	A/D conversion error (END)
`----`	During zeroing: the test terminals are not in the required open or short state, so zeroing cannot be performed

3.4 Test ports and fixtures

The TH2822 series combines a **three-terminal** and a **five-terminal** test port, so that convenient testing and high-accuracy testing are both possible.

- **Three-terminal banana jacks (12)** accept standard banana plugs, so inexpensive banana-plug to alligator-clip leads can be used and the range of applications extended easily. The disadvantage is lower measurement accuracy.
- **Five-terminal test slot (11)**, together with dedicated test fixtures, allows complete four-terminal measurement out to the DUT and keeps the specified accuracy. The instrument switches between the two ports automatically.

Terminal	Function
HPOT / HCUR	High terminal (+): potential and current, slot and jack marked “+”
LPOT / LCUR	Low terminal (–): potential and current, slot and jack marked “–”
GUARD	Guard terminal

Four-terminal fixtures for the five-terminal slot: **TH26027AS** (Kelvin clip), **TH26029C** (SMD Kelvin tweezers, supplied with TH2822C/D/E) and **TH26009C** (SMD Kelvin tweezers, optional).

> **WARNING**
>
> Discharge capacitors before connecting them (the warning is printed on the front panel below the keys). Measuring a charged capacitor may damage the instrument.

CHAPTER 4

Operation

4.1 Measurement parameters

To choose what is measured, first select the **primary parameter** with the PRI key, then, if required, a **secondary parameter** with the SEC key.

Parameter	Meaning	Models
L	Inductance (primary)	A / C / D / E
C	Capacitance (primary)	A / C / D / E
R	AC resistance (primary)	A / C / D / E
Z	Impedance (primary)	A / C / D / E
DCR	DC resistance (primary)	D / E only
D	Dissipation factor (secondary)	A / C / D / E
Q	Quality factor (secondary)	A / C / D / E
θ	Phase angle (secondary)	A / C / D / E
ESR	Equivalent series resistance (secondary)	A / C / D / E

Each press of PRI steps through L, C, R and Z (and DCR on TH2822D/E). Each press of SEC steps through D, Q, θ and ESR. After the primary parameter is changed, the secondary display shows the current test frequency; press SEC to show a secondary parameter again. In DCR measurement there is no secondary parameter.

4.2 Test frequency

The instrument applies an AC test signal to the device under test (DUT). Because real components are non-ideal and the test terminals and leads add distributed parameters, the same component can give different results at different test frequencies. Select a frequency suited to the component before measuring.

Press FREQ. If the secondary display is not showing the frequency, the first press shows the current frequency; each further press steps through the available frequencies:

Model	100 Hz	120 Hz	1 kHz	10 kHz	100 kHz
TH2822A	●	●	●	●	—
TH2822C	●	●	●	●	●
TH2822D	●	●	●	●	—
TH2822E	●	●	●	●	●

> **NOTE**
> 120 Hz is a nominal frequency; the actual frequency is 120.048 Hz. In record mode the FREQ key has no effect.

4.3 Test level TH2822D/E

The test level is the amplitude of the AC test signal. Some components are level-sensitive, so the same component can give different results at different levels. **Hold** the LEV (SEC) key to step through **0.6 V, 0.3 V and 1 V**; the selected level is indicated on the LCD. DCR measurement uses a 1 V DC signal.

TH2822A and TH2822C have a fixed test level of 0.6 Vrms.

4.4 Measurement speed

Press RATE to switch between **FAST** and **SLOW**; the LCD shows FAST or SLOW. Slow measurement gives more stable readings than fast measurement.

Measurement	FAST	SLOW
L, C, R, Z	250 ms (about 4 readings/s)	667 ms (about 1.5 readings/s)
DCR TH2822D/E	333 ms (about 3 readings/s)	400 ms (about 2.5 readings/s)

4.5 Series and parallel equivalent circuit

Because real components are non-ideal, an LCR meter represents them by a simple combination of ideal elements: a **series** or a **parallel** equivalent circuit.

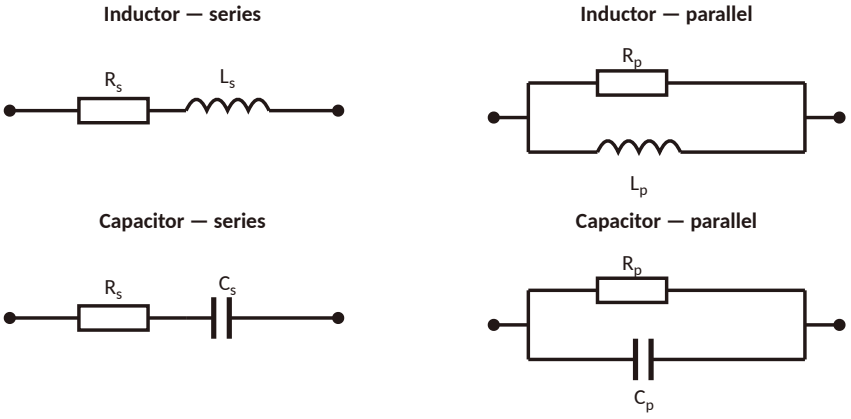

Figure 4-1 — Series and parallel equivalent circuits of an inductor and a capacitor

Choosing a suitable equivalent circuit gives better measurement results. As a rule, use **series** for low-impedance components (below about 100 Ω) and **parallel** for high-impedance components (above about 10 kΩ); in between, the choice has little effect. The recommended mode for every range is given in the accuracy tables in Chapter 7.

Hold P ↔ S to change the mode. The LCD shows PAL (parallel) or SER (series). When the primary parameter is changed, the equivalent circuit is set to its default: **parallel** for capacitors and resistors, **series** for inductors.

4.6 Auto LCR

Auto LCR lets the instrument judge the impedance nature of the component from the measurement result and automatically choose the primary parameter (L, C or R), the matching secondary parameter and a suitable equivalent circuit. This is convenient for mixed components and components of unknown type.

1. With Auto LCR off, **hold** AUTO (PRI). The LCD shows AUTO.
2. To leave Auto LCR, hold AUTO again. Changing the primary or secondary parameter, the equivalent circuit or the frequency also ends Auto LCR, and AUTO disappears.

Primary	Secondary
Capacitance C	Dissipation factor D
Inductance L	Quality factor Q
Resistance R	Phase angle θ

The equivalent circuit is selected according to the impedance: parallel for high impedance, series for low impedance.

4.7 Data hold (HOLD)

Data hold freezes the displayed values. Measurement continues internally, but the display is not updated. Press HOLD: the LCD shows DH and the primary and secondary displays keep the values from the moment the key was pressed. Press HOLD again to return to normal display.

4.8 Record mode (REC)

If the reading of the DUT is unstable and fluctuates within a range, record mode helps to obtain a reading: it dynamically captures the maximum, minimum and average values.

1. **Hold** REC (FREQ) to enter record mode. The LCD shows MAX AVG MIN while recording.
2. Press REC to step through the four states below. The buzzer sounds once when a stable recording has been completed.
3. To leave record mode, hold REC; no MAX, MIN or AVG text remains on the display.

State	LCD	Primary display shows
Recording	MAX AVG MIN	Current measurement while values are captured
Maximum	MAX	Maximum recorded value
Minimum	MIN	Minimum recorded value
Average	AVG	Average recorded value

> NOTE
> Recording is refreshed dynamically when the data fluctuate by more than 1%. Changing the type of the measured parameter ends record mode automatically.

4.9 Tolerance mode (TOL)

Tolerance mode is used for component sorting. In this mode the secondary display shows the percentage deviation from a nominal value. Tolerance mode, nominal value and sorting limits act on the **primary parameter** only. The available limits are **1%, 5%, 10% and 20%**. The primary reading at the moment tolerance mode is entered is stored as the nominal value.

$$\textbf{Deviation (\%)} = 100 \times (M_x - \text{Nom}) / \text{Nom}$$ where M_x = displayed primary value and Nom = stored nominal value.

1. Select the primary parameter with [PRI].
2. Select a suitable test frequency and equivalent circuit (and test level on TH2822D/E).
3. Perform open/short zeroing as required (§4.10).
4. Measure a reference component, or a component whose value is known to be accurate.
5. When a correct reading is displayed, press [TOL]. The displayed primary value is stored as the nominal value, the LCD shows `TOL`, and the secondary display shows the percentage deviation.
6. For limit sorting, press [TOL] repeatedly to select the 1%, 5%, 10% or 20% limit; it is shown on the LCD. Skip this step if only the deviation is needed.
7. Change the component. The buzzer sounds **once** when the value is within the limit and **three times** when it exceeds the limit.

> NOTE
> Any primary value on the display when [TOL] is pressed can be used as the nominal value, including values from data hold (DH) and record mode (MAX, MIN, AVG).

> CAUTION
> Discharge capacitors fully before measuring them.

To exit tolerance mode, hold [TOL]. Changing the frequency or the primary or secondary parameter also ends tolerance mode.

4.10 Open / short zeroing (CLEAR)

Zeroing reduces the errors caused by distributed parameters of the test leads. Short zeroing reduces the influence of contact resistance and lead resistance on low-impedance measurements; open zeroing reduces the influence of distributed capacitance and resistance between the test leads on high-impedance measurements.

Open and short zeroing share the [CLEAR] key. The instrument decides by measurement which of the two is to be performed.

Open zeroing

1. Select the test frequency to be zeroed (and level on TH2822D/E). Leave the test fixture or the test slot **open**.
2. Press [CLEAR]. After a moment the instrument measures and shows `OPEn` on the secondary display.
3. Press [CLEAR] again to carry out open zeroing.

Short zeroing

1. Select the test frequency to be zeroed. Insert the **short-circuit piece** (TH26010B) into the test slot; with SMD tweezers or test clips, short the test ends with the short-circuit piece.
2. Press [CLEAR]. After a moment the instrument shows `SHrt`.
3. Press [CLEAR] again to carry out short zeroing.

> NOTE
> If the secondary display shows `----`, the test terminals are not in the open (or short) state required, and zeroing cannot be performed.

Zeroing quick guide

1. Select the primary and secondary parameters to be measured.
2. Select the test frequency (and the test level on TH2822D/E).
3. Select the equivalent circuit.
4. With the test terminals open, perform open zeroing.
5. With the test terminals shorted, perform short zeroing.
6. Connect the DUT and start measuring.

- Zeroing data are held in RAM and are **lost at power-off**; zero the instrument after switching on.
- Zeroing data are stored **per frequency**. If 1 kHz was zeroed, switching to another frequency and back to 1 kHz does not require zeroing again.
- Zeroing is independent of the parameter type and equivalent circuit: the instrument zeroes the complex impedance and the displayed parameters are derived from it.
- After extended use, changes in temperature, fixtures, leads and contact resistance may make it necessary to zero again to keep the accuracy.

4.11 Utility menu (UTIL)

The built-in utility menu holds a few application settings. The keys used for it are marked in blue: UTIL, ▲ and ▼. **Hold** UTIL to enter the menu. The primary display shows the menu item and the secondary display its setting. Each press of UTIL moves to the next item; ▲ and ▼ change the setting.

`dCdLY` → `bEEP` → `AoFF` → `PuP` → `dEF` → `bAtt` (`dCdLY` is present on TH2822D/E only; on TH2822A/C the menu opens at `bEEP`.)

Item	Setting	Function
dCdLY	0000 – 9999 TH2822D/E	DCR measurement delay (dc delay): the delay after a level change before the measurement is taken. Default 0000.
bEEP	ON / OFF	Key beep. Does not affect other beeper signals (tolerance result, record update, auto power-off warning). Default ON.
AoFF	5 / 15 / 30 / 60 / OFF	Auto power-off time in minutes. Default 5.
PuP	PrE / SEt	Power-up state: PrE keeps the stored settings, SEt stores the current settings.
dEF	yES / NO	Restore default settings.
bAtt	read-only	Displays the supply (battery) voltage on the secondary display.

Auto power-off (AoFF)

When enabled, the instrument counts continuously; when the set time is reached, the buzzer sounds continuously to announce switch-off. Any operation before switch-off resets the timer. The LCD shows `@OFF` while the timer is active. Auto power-off works on battery power only, and is suspended in tolerance mode, record mode and remote state.

Storing the power-up state (PuP)

With `PuP` set to `SEt`, the current state is stored and recalled at the next power-up: primary parameter, secondary parameter, Auto LCR state, equivalent circuit, test frequency, test level (TH2822D/E), tolerance mode and limit, tolerance nominal value, and measurement speed. Only one set is stored; a new store overwrites the old one.

1. Before entering the menu, set up the measurement (frequency, primary/secondary parameters, …). If you are already in the menu, leave it by direct exit, finish the setup and re-enter.
2. Hold UTIL to enter the menu.
3. Press UTIL until `PuP` appears.
4. Use ▲/▼ to change `PuP` to `SEt`.
5. Press UTIL to check the other items, then hold UTIL to leave the menu (save exit).

Each time the menu is entered, `PuP` starts at `PrE`; to store a new state you must change it to `SEt` and leave with a save exit, which prevents accidental storing.

Restoring defaults (dEF)

Set `dEF` to `yES` and leave with a save exit to restore the settings below and clear the stored measurement settings and stored menu options. If `PuP` = `SEt` and `dEF` = `yES` at the same time, `PuP` takes priority: the settings are stored and the defaults are not restored.

Setting	Default
Primary parameter	C (capacitance)
Secondary parameter	None (frequency displayed)
Auto LCR	Off
Equivalent circuit	SER (series)
Test frequency	1 kHz
Test level TH2822D/E	0.6 V
Measurement speed	SLOW
Tolerance mode	Off
Key beep	ON
Auto power-off time	5 minutes
Stored measurement settings	Cleared
Stored menu options	Cleared

Leaving the menu

- **Save exit** — hold UTIL. The settings are stored in non-volatile memory and kept after power-off, and the `PuP` and `dEF` actions are executed.
- **Direct exit** — press any key other than UTIL, ▲, ▼ and POWER. The `PuP` and `dEF` actions are not executed; settings such as `bEEP` and `AoFF` stay in effect until power-off but are not stored, and the previous stored settings return at the next power-up.

4.12 Fuse protection

A fuse in the test signal path protects the internal circuitry against overloading by charged components. If it blows, the primary display shows FUSE and the buzzer sounds continuously; the keys do not respond and no measurement is possible.

In this case switch the instrument off, remove the external adapter and the battery, and contact Techmize after-sales service or your authorized distributor for replacement and repair. A FUSE alarm is also triggered when the test signal fails because of component damage or a signal-source fault.

CHAPTER 5

Measurement Examples

WARNING

- Never measure a charged capacitor; the instrument can be damaged.
- Measure components in a circuit only with the circuit switched off. Never measure a live circuit.
- In dusty environments the instrument gets dirty. Clean it regularly and protect the test terminals so that dust does not enter through them; accumulated dust is often slightly conductive and can eventually affect the instrument.
- Do not place the instrument in explosive atmospheres, in direct sunlight or in overheated locations.
- Before opening the rear cover, switch off, remove the DUT and test accessories, and disconnect the external adapter.

NOTE

For the specified accuracy, perform open and short zeroing before measuring (§4.10).

5.1 Inductance

1. Hold [POWER] to switch on.
2. Press [PRI] until the LCD shows **L**.
3. Insert the inductor into the test slot, or connect it with a suitable accessory: banana-plug to alligator-clip leads, test clip or SMD test tweezers (four-terminal accessories: TH26027AS, TH26029C, TH26009C).
4. Press [FREQ] to select the test frequency.
5. TH2822D/E Hold [LEV] to select the test level.
6. If a secondary parameter is needed, press [SEC] (D, Q, θ, ESR).
7. Read the result on the LCD.

5.2 Capacitance

WARNING

Make sure the capacitor is completely discharged before measuring. Large capacitors can take a long time to discharge. Connecting a capacitor that is not fully discharged can damage internal components of the instrument.

1. Hold [POWER] to switch on.
2. Press [PRI] until the LCD shows **C**.
3. Insert the capacitor into the test slot, or connect it with a suitable accessory.
4. Press [FREQ] to select the test frequency.
5. TH2822D/E Hold [LEV] to select the test level.
6. If a secondary parameter is needed, press [SEC].
7. Read the result on the LCD.

5.3 Resistance

1. Hold [POWER] to switch on.
2. Press [PRI] until the LCD shows **R**.
3. Insert the resistor into the test slot, or connect it with a suitable accessory.
4. Press [FREQ] to select the test frequency.
5. TH2822D/E Hold [LEV] to select the test level.
6. If a secondary parameter is needed, press [SEC].
7. Read the result on the LCD.

> **NOTE**
> The instrument measures resistance with an AC signal. The result therefore reflects the AC resistance of the component, not its DC resistance. For DC resistance use DCR (§5.5, TH2822D/E).

5.4 Impedance

1. Hold [POWER] to switch on.
2. Press [PRI] until the LCD shows **Z**.
3. Insert the impedance component (resistor, capacitor or inductor) into the test slot, or connect it with a suitable accessory.
4. Press [FREQ] to select the test frequency.
5. TH2822D/E Hold [LEV] to select the test level.
6. If a secondary parameter is needed, press [SEC].
7. Read the result on the LCD.

5.5 DC resistance TH2822D/E

1. Hold [POWER] to switch on.
2. Press [PRI] until the LCD shows **DCR**.
3. Insert the resistive component into the test slot, or connect it with a suitable accessory.
4. Read the result on the LCD.

DCR uses a 1 Vdc test signal; no secondary parameter, frequency or equivalent circuit applies. The delay between a level change and the measurement can be set with `dCdLY` in the utility menu (§4.11).

CHAPTER 6

Remote Control

6.1 Connecting to a PC

The instrument communicates with a PC through its Mini-USB port. After the driver has been installed, the PC controls the instrument, or collects measurement results, through a virtual serial port.

1. Obtain the USB driver from the installation CD, or download it from the Techmize website (en.tonghui.com.cn).
2. Connect the instrument to a USB port of the PC with the Mini-USB cable and switch the instrument on.
3. If the driver is already installed, no further installation is needed.
4. When Windows detects the USB connection and offers to install a driver, cancel the wizard and run the installer from the driver package instead.
5. After installation, Windows creates a virtual serial port and assigns a port number; you can find it in the Windows Device Manager.
6. Open your control software and connect to the instrument through this port. The free FastAccess PC communication and data-acquisition software is available for download from the website.

Serial port settings

Baud rate	Data bits	Parity	Stop bits	Flow control
9600	8	None	1	None

If the parameters assigned to the virtual serial port differ from these, change them: Windows Device Manager → Ports → right-click the port → Properties → Port Settings.

6.2 The RMT key and operating states

On the front panel, the [RMT] key switches the operating state for communication:

State	Description
Local	Normal front-panel operation.
Remote	Entered automatically as soon as the instrument receives any command from the host. The LCD shows `RMT`. All keys except [RMT] and [POWER] are locked. Press [RMT] to return to local operation (unless local lockout is active, see `*LLO`).
Auto Fetch	From local state, press [RMT]: the instrument sends every measurement result automatically to the interface, and the PC can simply read it without sending commands — convenient for simple data logging. `RMT` blinks, once per result sent. Press [RMT] again to cancel.

Remote commands have the highest priority among panel operation, Auto Fetch and remote control: when a command is received during Auto Fetch, Auto Fetch is cancelled. To use Auto Fetch after remote control, press [RMT] to return to local operation, then press it again.

6.3 Command protocol

The TH2822 series uses the **SCPI** command set. Commands and query results are transmitted as ASCII strings. A command line is ended by a terminator, and the instrument analyses and executes it only after the terminator has been received. Terminators: `<CR>` (0x0D), `<LF>` (0x0A) or `<CR><LF>`.

The response to a query has the form `<Result><CR><LF>`. For example, the response to `FETCh?` is `<primary data>, <secondary data>, <bin number><CR><LF>`.

Data type	Meaning	Example
<NR1>	Integer	+800, −200, 100, −50
<NR2>	Real number	+1.56, −0.001, 10.5
<NR3>	Floating point, exponent format	+2.345678E+04, −1.345678E−01
<Boolean>	Switch state	ON or OFF
<Literal>	Parameter string	HOLD

Syntax symbols (part of the command)

`:`	Colon — go one level down
`;`	Semicolon — commands on the same level
`*`	Asterisk — common command
`,`	Comma — parameter separator
`?`	Question mark — query
space	Separates command and parameter

Symbols used in this description (not part of the command)

`[ ]`	Optional parameter
`|`	Separates alternatives
`< >`	Name of a variable parameter, or list of values
`( )`	Comment, not part of the command

Abbreviations and case. Each command has a full and a short form; in the tables below the short form is written in capitals (for example `FREQuency` — `FREQ`). Both are equally valid. The short form is normally the first four letters; abbreviations not listed in the tables are invalid. Commands and parameters are not case-sensitive on the bus.

6.4 Command reference

Common commands

Common commands are defined by IEEE 488 and start with `*`. The TH2822 series supports the following.

Command	Description
`*IDN?`	Query instrument and version information. Returns `<model>,<firmware version>,<serial number>`.
`*LLO`	Local lockout: no front-panel key, including RMT, can be operated (POWER still switches the instrument off).
`*GTL`	Go to local: returns to local operation and cancels local lockout. After `*LLO`, front-panel operation is possible only through `*GTL`.
`*TRG`	Trigger a measurement. The instrument measures continuously, so a trigger has no effect.

FREQuency subsystem

Command	Description
`FREQuency <value>`	Set the test frequency. Parameter: `100`, `120`, `1000`, `10000` or `100Hz`, `120Hz`, `1kHz`, `10kHz` on all models; `100000` / `100kHz` on **TH2822C and TH2822E only** — sending `100000`/`100kHz` to a TH2822A or TH2822D returns error `E11` (§6.4, Error codes), the same as any other unsupported parameter. Example: `FREQuency 100Hz`
`FREQuency?`	Query the test frequency. Returns `<100Hz|120Hz|1kHz|10kHz>` on TH2822A/D, `<100Hz|120Hz|1kHz|10kHz|100kHz>` on TH2822C/E.

VOLTage subsystem TH2822D/E

Command	Description
`VOLTage <value>`	Set the test level (not in DCR). Parameter: `0.3`, `0.6`, `1` or `3e-1`, `6e-1`, `1e0`. Example: `VOLTage 0.3` sets 0.3 V.
`VOLTage?`	Query the test level. Returns `<0.3V|0.6V|1V>`.

FUNCtion subsystem

Command	Description
`FUNCtion:impa <L|C|R|Z|DCR>`	Select the primary parameter (DCR: TH2822D/E only). Example: `FUNCtion:impa L`
`FUNCtion:impa?`	Query the primary parameter. Returns `<L|C|R|Z|DCR|NULL>` (DCR: TH2822D/E only).
`FUNCtion:impb <D|Q|THETA|ESR>`	Select the secondary parameter (not in DCR). Example: `FUNCtion:impb D`
`FUNCtion:impb?`	Query the secondary parameter. Returns `<D|Q|THETA|ESR|NULL>`.
`FUNCtion:EQUivalent <SERies|parallel|PAL>`	Set the equivalent circuit (not in DCR). `SERies` — series; `parallel` and `PAL` — parallel. Example: `FUNCtion:EQUivalent SERies`
`FUNCtion:EQUivalent?`	Query the equivalent circuit. Returns `<SER|PAL>`.

CALCulate subsystem — tolerance

Command	Description
`CALCulate:TOLerance:STATe <ON|OFF>`	Switch tolerance mode on or off. Example: `CALCulate:TOLerance:STATe ON`
`CALCulate:TOLerance:STATe?`	Query tolerance mode. Returns `<ON|OFF>`.
`CALCulate:TOLerance:NOMinal?`	Query the nominal value. Returns `NR3`, or `-----` if out of range.
`CALCulate:TOLerance:VALUe?`	Query the percentage deviation shown on the secondary display. Returns `NR3`, or `-----` if out of range.
`CALCulate:TOLerance:RANGe <1|5|10|20>`	Set the tolerance limit to 1%, 5%, 10% or 20%. Example: `CALCulate:TOLerance:RANGe 1`
`CALCulate:TOLerance:RANGe?`	Query the tolerance limit. Returns `<BIN1|BIN2|BIN3|BIN4|---->`; `----` means no bin set.

CALCulate subsystem — recording

Command	Description
`CALCulate:RECording:STATe <ON|OFF>`	Switch record mode on or off. Example: `CALCulate:RECording:STATe ON`
`CALCulate:RECording:STATe?`	Query record mode. Returns `<ON|OFF>`.
`CALCulate:RECording:MAXimum?`	Query the recorded maximum. Returns `<NR3, NR3>` (primary, secondary); `-----` if out of range or no data.
`CALCulate:RECording:MINimum?`	Query the recorded minimum. Returns `<NR3, NR3>` (primary, secondary); `-----` if out of range or no data.
`CALCulate:RECording:AVERage?`	Query the recorded average. Returns `<NR3, NR3>` (primary, secondary); `-----` if out of range or no data.
`CALCulate:RECording:PRESent?`	Query the present measured value in record mode. Returns `<NR3, NR3>` (primary, secondary); `-----` if out of range or no data.

FETCh subsystem

Command	Description
`FETCh?`	Query the measurement result: primary value, secondary value and limit comparison result (bin number). Returns `<NR3, NR3, NR1>` when the primary parameter is L, C, R or Z (primary, secondary, bin), and `<NR3, NR1>` when it is DCR (primary, bin; DCR: TH2822D/E).

SCPI command summary

Command	Parameter	Function
FREQuency	<Value>	Set test frequency
FREQuency?		Query test frequency
VOLTage (D/E)	<Value>	Set test level
VOLTage? (D/E)		Query test level
FUNCtion:impa / impa?	<Literal>	Set / query primary parameter
FUNCtion:impb / impb?	<Literal>	Set / query secondary parameter
FUNCtion:EQUivalent / EQUivalent?	<Literal>	Set / query equivalent circuit
CALCulate:TOLerance:STATe / STATe?	<Boolean>	Set / query tolerance mode
CALCulate:TOLerance:NOMinal?		Query nominal value
CALCulate:TOLerance:VALUe?		Query deviation percentage
CALCulate:TOLerance:RANGe / RANGe?	<Value>	Set / query limit bin
CALCulate:RECording:STATe / STATe?	<Boolean>	Set / query record mode
CALCulate:RECording:MAXimum? / MINimum? / AVERage? / PRESent?		Query recorded maximum / minimum / average / present value
FETCh?		Query measurement result

Error codes

If a command or parameter sent over the bus is wrong, the instrument stops parsing and executing the command, shows an error on the LCD and sounds the buzzer once.

Code	Meaning
E10	Command not recognized
E11	Incorrect parameter
E12	Syntax error

CHAPTER 7

Specifications

The specifications below apply to TH2822A, TH2822C, TH2822D and TH2822E and are subject to change without notice.

7.1 General specifications

Parameter	TH2822A	TH2822C	TH2822D	TH2822E
Test parameters	L, C, R, Z; D, Q, θ, ESR		L, C, R, Z, DCR; D, Q, θ, ESR	
Equivalent circuit	Series, parallel			
Parameter / equivalent mode	Manual, Auto (Auto LCR)			
Ranging	Auto			
Test terminals	3-terminal and 5-terminal, auto-switching			
Measurement speed — LCR	Fast 250 ms · Slow 667 ms			
Measurement speed — DCR	—		Fast 333 ms · Slow 400 ms	
Calibration	Open, short			
Comparator	1%, 5%, 10%, 20%			
Input fuse	0.1 A / 250 V			
Interface	Mini-USB (virtual serial port), SCPI			
Test frequency	100 Hz, 120 Hz*, 1 kHz, 10 kHz	100 Hz, 120 Hz*, 1 kHz, 10 kHz, 100 kHz	100 Hz, 120 Hz*, 1 kHz, 10 kHz	100 Hz, 120 Hz*, 1 kHz, 10 kHz, 100 kHz
Test level — LCR	0.6 Vrms		0.3 / 0.6 / 1 Vrms	
Test level — DCR	—		1 Vdc	
Source output impedance	100 Ω			
Display	LCD, primary + secondary dual display, with backlight			
Reading	Primary parameter: 40,000 counts; secondary D/Q/θ: minimum resolution 0.0001			
Basic accuracy	0.25%	0.25%	0.1%	0.1%
Range — L	0.000 µH – 1000.0 H (resolution 0.001 µH)			
Range — C	0.000 pF – 20.000 mF (resolution 0.001 pF)			
Range — |Z|, R, ESR	0.0000 Ω – 10.000 MΩ (resolution 0.0001 Ω)			
Range — DCR	—		0.0000 Ω – 20.000 MΩ (resolution 0.0001 Ω)	
Range — D	0.0000 – 9.999 (resolution 0.0001)			
Range — Q	0.0000 – 9999 (resolution 0.0001)			
Range — θ	−179.99° – 179.99° (resolution 0.01°)			

* 120 Hz is the nominal frequency; the actual frequency is 120.048 Hz.

7.2 Power supply and environment

Parameter	TH2822A	TH2822C	TH2822D	TH2822E
Battery	9 V alkaline (IEC 6LR61)	8.4 V NiMH, 200 mAh, rechargeable (LH-200H7C)		
AC power adapter	Input 220 V (±10%), 50 Hz (±5%); output 12–15 V DC			
Working current (backlight off)	Max. 28 mA; typ. 25 mA (@ 1 kHz, 100 Ω load)		Max. 35 mA; typ. 25 mA (@ 1 kHz, 0.6 Vrms, 100 Ω load)	
Standby (power-off) current	Max. 2 µA		Max. 11 µA	
Battery life (backlight off)	Typ. 16 h (new alkaline)	Typ. 6 h (fully charged NiMH)		
Charging	—	Single cycle max. 80 min; charge current max. 42 mA	Single cycle max. 160 min; charge current max. 100 mA	
Auto power-off	5 / 15 / 30 / 60 min or OFF (battery operation only); factory default 5 min			
Low-battery indication	Indicator on when battery voltage is below 6.8 V			
Backlight	On battery: dims after 15 s, off after 30 s. On external power: on until switched off.			
Operating environment	0 °C to 40 °C; ≤ 90% R.H.			
Weight	350 g			
Dimensions (H × W × D)	190 mm × 90 mm × 41 mm			
Safety and EMC	IEC 61010-1:2001; IEC 61326-2-1:2005			

7.3 Accuracy conditions

1. Ambient temperature 23 °C ± 5 °C, humidity ≤ 75% R.H.
2. Warm up the instrument for about 10 minutes before testing.
3. Test at the test slot on the end face of the instrument.
4. Perform open and short zeroing before testing.
5. Measure in the recommended equivalent circuit.
6. Percentage accuracy means ±(% of reading + digits), where “digits” are counts of the last displayed digit.
7. The instrument can measure and display beyond the ranges given in the tables, but no accuracy is specified outside them.
8. At a test level of 0.3 V, multiply the accuracy by 2 (TH2822D/E).
9. Subscripts: s = series equivalent circuit; p = parallel equivalent circuit; e = accuracy.
10. Some parameters cannot be given as a table and must be calculated from the corresponding measured result using the formulas in §7.7.

Columns marked **A / C** apply to TH2822A and TH2822C; columns marked **D / E** apply to TH2822D and TH2822E. Frequencies of 100 kHz are available on TH2822C and TH2822E only. * D_e accuracy is evaluated for D_e < 0.5.

7.4 Inductance L and quality factor Q

Range	Display range	L_e		D_e*		Recomm. circuit
		A / C	D / E	A / C	D / E	
100 Hz / 120 Hz						
1000 H	400.0 H – 1000.0 H	1.00% + 3		0.0100		Parallel
400 H	40.00 H – 399.99 H	0.35% + 2		0.0035		Parallel
40 H	4.000 H – 39.999 H	0.25% + 2	0.10% + 2	0.0025	0.0010	Parallel
4 H	400.0 mH – 3.9999 H	0.25% + 2	0.10% + 2	0.0025	0.0010	—
400 mH	40.00 mH – 399.99 mH	0.25% + 2	0.10% + 2	0.0025	0.0010	Series
40 mH	4.000 mH – 39.999 mH	0.45% + 2		0.0045		Series
4 mH	0 µH – 3.999 mH	1.40% + 5		—		Series
1 kHz						
100 H	40.00 H – 100.00 H	1.00% + 3		0.0100		Parallel
40 H	4.000 H – 39.999 H	0.35% + 2		0.0035		Parallel
4 H	400.0 mH – 3.9999 H	0.25% + 2	0.10% + 2	0.0025	0.0010	Parallel
400 mH	40.00 mH – 399.99 mH	0.25% + 2	0.10% + 2	0.0025	0.0010	—
40 mH	4.000 mH – 39.999 mH	0.25% + 2	0.10% + 2	0.0025	0.0010	Series
4 mH	400.0 µH – 3.9999 mH	0.45% + 2		0.0045		Series
400 µH	0.0 µH – 399.9 µH	1.40% + 5		—		Series
10 kHz						
1000 mH	400.0 mH – 999.99 mH	0.80% + 3		0.0080		Parallel
400 mH	40.00 mH – 399.99 mH	0.35% + 2		0.0035		Parallel
40 mH	4.000 mH – 39.999 mH	0.25% + 2	0.10% + 2	0.0025	0.0010	—
4 mH	400.0 µH – 3.9999 mH	0.30% + 2		0.0030		Series
400 µH	40.00 µH – 399.99 µH	0.45% + 2		0.0045		Series
40 µH	0.00 µH – 39.99 µH	1.40% + 5		—		Series
100 kHz (TH2822C / E only)						
100 mH	40.00 mH – 99.99 mH	1.20% + 5		0.0120		Parallel
40 mH	4.000 mH – 39.999 mH	0.80% + 2		0.0080		Parallel
4 mH	400.0 µH – 3.9999 mH	0.50% + 2		0.0050		—
400 µH	40.00 µH – 399.99 µH	0.50% + 2		0.0050		Series
40 µH	4.000 µH – 39.999 µH	0.80% + 5		0.0080		Series
4 µH	0.000 µH – 3.999 µH	2.50% + 10		—		Series

The accuracy of the quality factor Q_e is calculated as follows, where Q_x is the measured value: for $Q_x \times D_e \leq 1$,

$$Q_e = \pm (Q_x^2 \times D_e) / (1 \mp Q_x \times D_e)$$

7.5 Capacitance C and dissipation factor D

Range	Display range	C_e		D_e*		Recomm. circuit
		A / C	D / E	A / C	D / E	
100 Hz / 120 Hz						
20 mF	4.000 mF – 20.000 mF	5.00% + 5		±0.0500		Series
4 mF	400.0 µF – 3.9999 mF	1.00% + 3		±0.0100		Series
400 µF	40.00 µF – 399.99 µF	0.35% + 2		±0.0035		Series
40 µF	4.000 µF – 39.999 µF	0.25% + 2	0.10% + 2	±0.0025	±0.0010	Series
4 µF	400.0 nF – 3.9999 µF	0.25% + 2	0.10% + 2	±0.0025	±0.0010	—
400 nF	40.00 nF – 399.99 nF	0.25% + 2	0.10% + 2	±0.0025	±0.0010	Parallel
40 nF	4.000 nF – 39.999 nF	0.35% + 3		±0.0035		Parallel
4 nF	0 pF – 3.999 nF	1.25% + 5		—		Parallel
1 kHz						
1000 µF	400.0 µF – 999.99 µF	2.00% + 5		±0.0200		Series
400 µF	40.00 µF – 399.99 µF	1.00% + 3		±0.0100		Series
40 µF	4.000 µF – 39.999 µF	0.35% + 2		±0.0035		Series
4 µF	400.0 nF – 3.9999 µF	0.25% + 2	0.10% + 2	±0.0025	±0.0010	Series
400 nF	40.00 nF – 399.99 nF	0.25% + 2	0.10% + 2	±0.0025	±0.0010	—
40 nF	4.000 nF – 39.999 nF	0.25% + 2	0.10% + 2	±0.0025	±0.0010	Parallel
4 nF	400.0 pF – 3.9999 nF	0.35% + 3		±0.0035		Parallel
400 pF	0.00 pF – 399.99 pF	1.25% + 5		—		Parallel
10 kHz						
100 µF	40.00 µF – 100.00 µF	3.00% + 5		±0.0300		Series
40 µF	4.000 µF – 39.999 µF	1.50% + 3		±0.0150		Series
4 µF	400.0 nF – 3.9999 µF	0.35% + 2		±0.0035		Series
400 nF	40.00 nF – 399.99 nF	0.25% + 2	0.10% + 2	±0.0025	±0.0010	Series
40 nF	4.000 nF – 39.999 nF	0.25% + 2	0.10% + 2	±0.0025	±0.0010	—
4 nF	400.0 pF – 3.9999 nF	0.25% + 2	0.10% + 2	±0.0025	±0.0010	Parallel
400 pF	40.00 pF – 399.99 pF	0.35% + 3		±0.0035		Parallel
40 pF	0.00 pF – 39.99 pF	1.25% + 5		—		Parallel
100 kHz (TH2822C / E only)						
10 µF	4.000 µF – 10.000 µF	6.00% + 20		±0.0600		Series
4 µF	400.0 nF – 3.9999 µF	2.50% + 10		±0.0250		Series
400 nF	40.00 nF – 399.99 nF	0.80% + 5		±0.0080		Series
40 nF	4.000 nF – 39.999 nF	0.50% + 2		±0.0050		Series
4 nF	400.0 pF – 3.9999 nF	0.50% + 2		±0.0050		—
400 pF	40.00 pF – 399.99 pF	0.80% + 2		±0.0080		Parallel
40 pF	4.000 pF – 39.999 pF	1.20% + 5		±0.0120		Parallel
4 pF	0.000 pF – 4.999 pF	3.00% + 10		—		Parallel

7.6 Impedance Z, phase angle θ and DC resistance DCR

Range	Display range	Z_e		θ_e		Recomm. circuit
		A / C	D / E	A / C	D / E	
100 Hz – 10 kHz						
10 MΩ	4.000 MΩ – 10.000 MΩ	3.00% + 5		±1.75°		Parallel
4 MΩ	400.0 kΩ – 3.9999 MΩ	1.25% + 3		±0.75°		Parallel
400 kΩ	40.00 kΩ – 399.99 kΩ	0.35% + 2		±0.25°		Parallel
40 kΩ	4.000 kΩ – 39.999 kΩ	0.25% + 2	0.10% + 2	±0.15°	±0.10°	Parallel
4 kΩ	400.0 Ω – 3.9999 kΩ	0.25% + 2	0.10% + 2	±0.15°	±0.10°	—
400 Ω	40.00 Ω – 399.99 Ω	0.25% + 2	0.10% + 2	±0.15°	±0.10°	Series
40 Ω	4.000 Ω – 39.999 Ω	0.35% + 2		±0.25°		Series
4 Ω	0.4000 Ω – 3.9999 Ω	1.00% + 3		±0.60°		Series
0.4 Ω	0.0000 Ω – 0.3999 Ω	3.00% + 5		—		Series
100 kHz (TH2822C / E only)						
10 MΩ	4.000 MΩ – 10.000 MΩ	8.00% + 20		±4.60°		Parallel
4 MΩ	400.0 kΩ – 3.9999 MΩ	3.00% + 10		±1.75°		Parallel
400 kΩ	40.00 kΩ – 399.99 kΩ	1.20% + 5		±0.69°		Parallel
40 kΩ	4.000 kΩ – 39.999 kΩ	0.80% + 2		±0.46°		Parallel
4 kΩ	400.0 Ω – 3.9999 kΩ	0.50% + 2		±0.30°		—
400 Ω	40.00 Ω – 399.99 Ω	0.50% + 2		±0.30°		Series
40 Ω	4.000 Ω – 39.999 Ω	0.80% + 5		±0.46°		Series
4 Ω	0.4000 Ω – 3.9999 Ω	2.50% + 10		±1.43°		Series
0.4 Ω	0.0000 Ω – 0.3999 Ω	6.00% + 20		—		Series

DC resistance (DCR) — TH2822D/E

Range	Display range	Accuracy
20 MΩ	4.000 MΩ – 20.000 MΩ	2.00% + 20
4 MΩ	400.0 kΩ – 3.9999 MΩ	1.00% + 10
400 kΩ	40.00 kΩ – 399.99 kΩ	0.50% + 5
40 kΩ	4.000 kΩ – 39.999 kΩ	0.10% + 2
4 kΩ	400.0 Ω – 3.9999 kΩ	0.10% + 2
400 Ω	40.00 Ω – 399.99 Ω	0.10% + 2
40 Ω	4.000 Ω – 39.999 Ω	0.10% + 2
4 Ω	0.4000 Ω – 3.9999 Ω	0.50% + 10
0.4 Ω	0.0000 Ω – 0.3999 Ω	2.00% + 20

7.7 Equivalent series and parallel resistance

Series equivalent resistance R_s: $R_{se} = \pm X_x \times \varphi_e$, where X_x is the measured reactance ($X_x = 2\pi f L_x$ or $X_x = 1 / (2\pi f C_x)$) and $\varphi_e = \theta_e \times \pi / 180$ is the phase-angle accuracy in radians. The accuracy of ESR is the same as that of R_s.

Parallel equivalent resistance R_p: $R_{pe} = \pm (R_{px} \times \varphi_e) / (D_x \mp \varphi_e)$, where R_{px} is the measured R_p and D_x the measured dissipation factor.

CHAPTER 8

Maintenance & Support

> **WARNING**
> Do not repair the instrument yourself; maintenance and repair must be carried out by qualified personnel. Keep liquids out of the instrument and do not leave foreign objects, especially conductive ones, inside it.

8.1 Troubleshooting

Symptom	What to check
Instrument does not switch on	Check the battery and the external power supply, and the power socket. Hold POWER for about 2 seconds.
Keys do not respond	If the LCD shows RMT, the instrument is in remote state: press RMT to return to local operation. After *LLO, local operation is possible only with *GTL (Chapter 6). Check that the keys themselves are not faulty.
Abnormal measurement results	Check that the test accessories are in good condition and that the spring contacts in the test slot are not damaged. Perform open and short zeroing. Re-read the operating instructions to make sure the instrument is used correctly.
FUSE shown, buzzer sounds	Internal fuse blown (§4.12). Switch off, remove adapter and battery, contact service.
Low-battery indicator	TH2822C/D/E: charge the battery (§2.5). TH2822A: replace the 9 V battery (§2.3).

Do not replace components or specific parts yourself. For repairs that you cannot identify, contact your distributor or Techmize after-sales service. When replacing the battery, switch the instrument off and disconnect the external power first (§2.3).

8.2 Cleaning

1. Before cleaning, switch the instrument off and disconnect the external adapter and the battery.
2. Prevent water or other liquids from entering through the test slot, keys and other seams. If this happens, stop using the instrument immediately and remove the external power and the battery.
3. Wipe soiled parts carefully with a soft, clean cloth moistened with mild, diluted detergent; avoid scratching the surface.
4. After cleaning, let the instrument dry completely before using it again.

8.3 Service and support

For warranty conditions see §1.8. For technical questions, spare parts, calibration or repair, contact Techmize or your authorized distributor:

Techmize Electronic GmbH
Office 125–126, Regus
Carl-Zeiss-Ring 15a, 85737 Ismaning,
Germany

Contact
Mobile: +49 171 4981898
Email: dx.han@tonghui.com.cn
Web: en.tonghui.com.cn

Registration
Managing Director: Haohua Zhao
Register Court: Amtsgericht München
HRB 312530 · VAT ID DE463170824

APPENDIX A

Quick Reference

A.1 Common tasks

To ...	Do this
Switch on / off	Hold POWER ≈ 2 s
Select L, C, R, Z (DCR on D/E)	Press PRI
Select D, Q, θ, ESR	Press SEC
Change test frequency	Press FREQ
Change test level (D/E)	Hold LEV (SEC): 0.6 V → 0.3 V → 1 V
Fast / slow measurement	Press RATE
Series / parallel circuit	Hold P ↔ S (RATE)
Auto LCR on / off	Hold AUTO (PRI)
Freeze the reading	Press HOLD; press again to release
Record MAX / AVG / MIN	Hold REC (FREQ); press REC to step; hold REC to exit
Sort components	Press TOL to store nominal value; press TOL again to select 1 / 5 / 10 / 20%; hold TOL to exit
Zero the instrument	Press CLEAR (open or short as shown), press CLEAR again to confirm
Backlight on / off	Hold RMT ☼ ≈ 2 s
Utility menu	Hold UTIL; UTIL = next item; ▲ ▼ = change; hold UTIL = save and exit
Start / stop Auto Fetch	Press RMT (local state)
Return from remote state	Press RMT

A.2 Terms

Term	Meaning
DUT	Device under test
DCR	DC resistance
ESR	Equivalent series resistance
PAL / SER	Parallel / series equivalent circuit
TOL	Tolerance (comparator) mode
REC	Record mode (MAX / AVG / MIN)
DH	Data hold
SCPI	Standard Commands for Programmable Instruments